US00D584373S

(12) United States Design Patent

Young

(10) Patent No.: US D584,373 S

(45) Date of Patent: ** Jan. 6, 2009

(54) **RIFLE WITH BUTT AND FORE-END FEATURES**

(75) Inventor: **Nicholas Young**, Murray, UT (US)

(73) Assignee: **Desert Manufacturing, LLC.**, Salt Lake City, UT (US)

(**) Term: **14 Years**

(21) Appl. No.: **29/303,100**

(22) Filed: **Jan. 31, 2008**

(51) **LOC (9) Cl.** **22-01**

(52) **U.S. Cl.** **D22/103**

(58) **Field of Classification Search** D22/100, D22/101, 103, 108; D21/572, 573; 42/51, 42/71.01, 75.01, 75.02, 90; 362/110; 124/66, 124/67, 74; 89/40.06, 37.04, 33.04

See application file for complete search history.

(56) **References Cited**

U.S. PATENT DOCUMENTS

5,900,577	A	*	5/1999	Robinson et al.	89/191.01
D512,117	S	*	11/2005	Murello et al.	D22/103
D516,660	S	*	3/2006	Murello et al.	D22/100
D517,152	S	*	3/2006	Murello et al.	D22/103
D517,637	S	*	3/2006	Murello et al.	D22/100
D551,313	S	*	9/2007	Saur et al.	D22/103
2001/0042334	A1	*	11/2001	Weichert et al.	42/105
2004/0244258	A1	*	12/2004	O'Dwyer et al.	42/77

* cited by examiner

Primary Examiner—Cathron C Brooks
Assistant Examiner—Melanie Levy
(74) *Attorney, Agent, or Firm*—Workman Nydegger

(57) **CLAIM**

The ornamental design for a rifle with butt and fore-end features, as shown and described.

DESCRIPTION

FIG. **1** is a top perspective view of a rifle with butt and fore-end features design;

FIG. **2** is another top perspective view of the rifle with butt and fore-end features design shown in FIG. **1**;

FIG. **3** is a bottom perspective view of the rifle with butt and fore-end features design shown in FIG. **1**;

FIG. **4** is a side view of the rifle with butt and fore-end features design shown in FIG. **1**;

FIG. **5** is another side view of the rifle with butt and fore-end features design shown in FIG. **1**;

FIG. **6** is a top view of the rifle with butt and fore-end features design shown in FIG. **1**;

FIG. **7** is an opposing bottom view of the rifle with butt and fore-end features design shown in FIG. **6**;

FIG. **8** is a frontal view of the rifle with butt and fore-end features design shown in FIG. **1**; and,

FIG. **9** is an opposing rear view of the rifle with butt and fore-end features design shown in FIG. **8**.

1 Claim, 6 Drawing Sheets

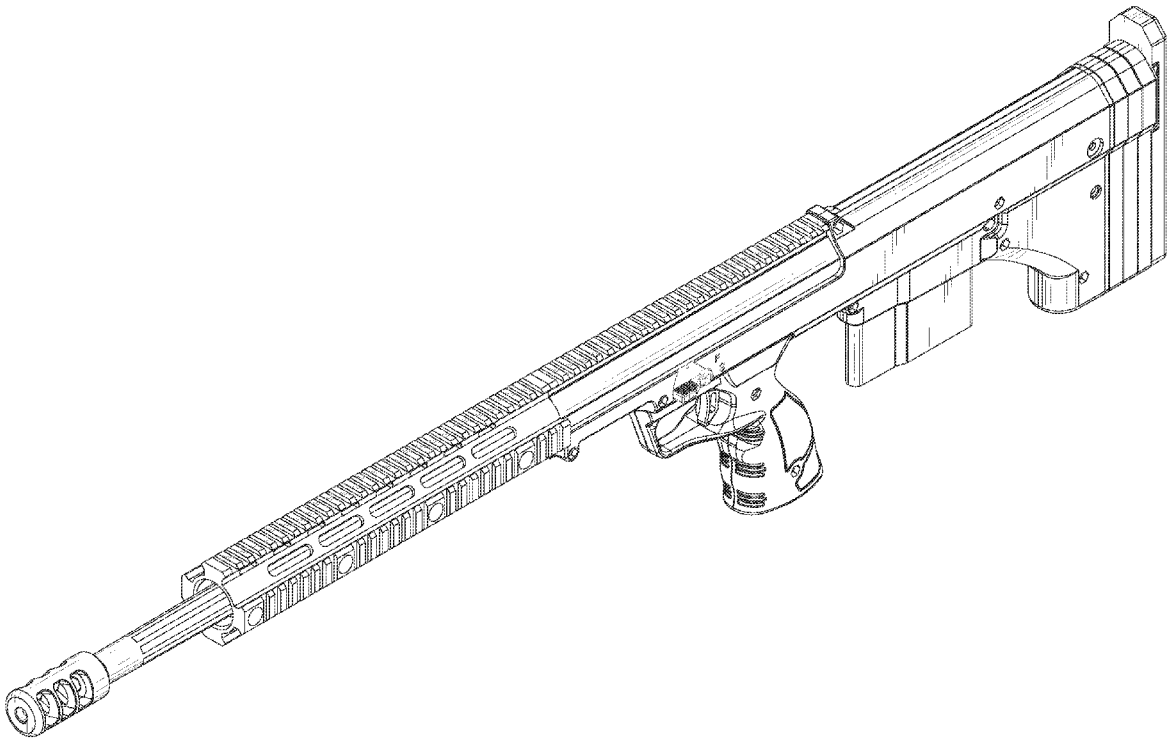

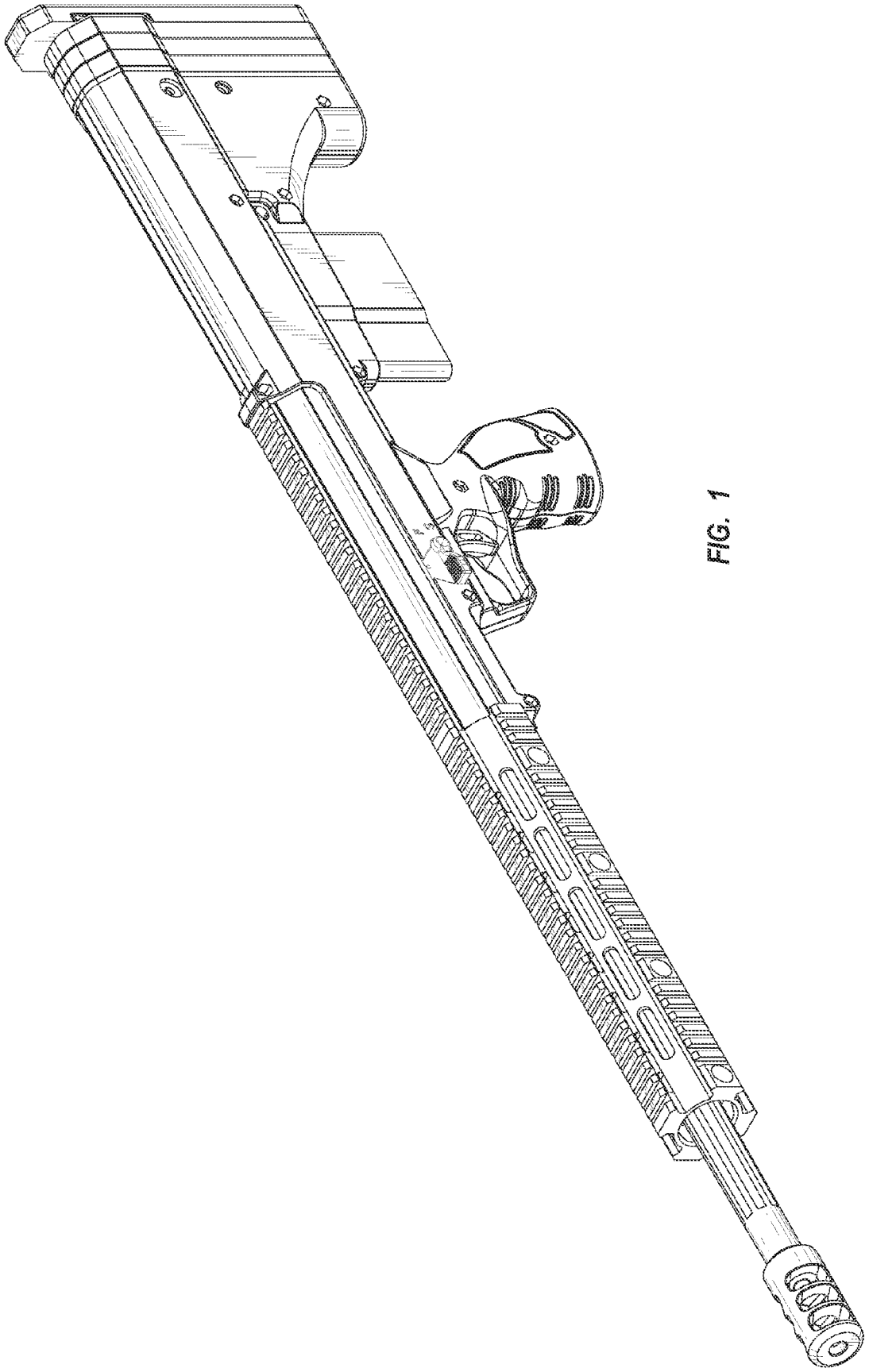

FIG. 1

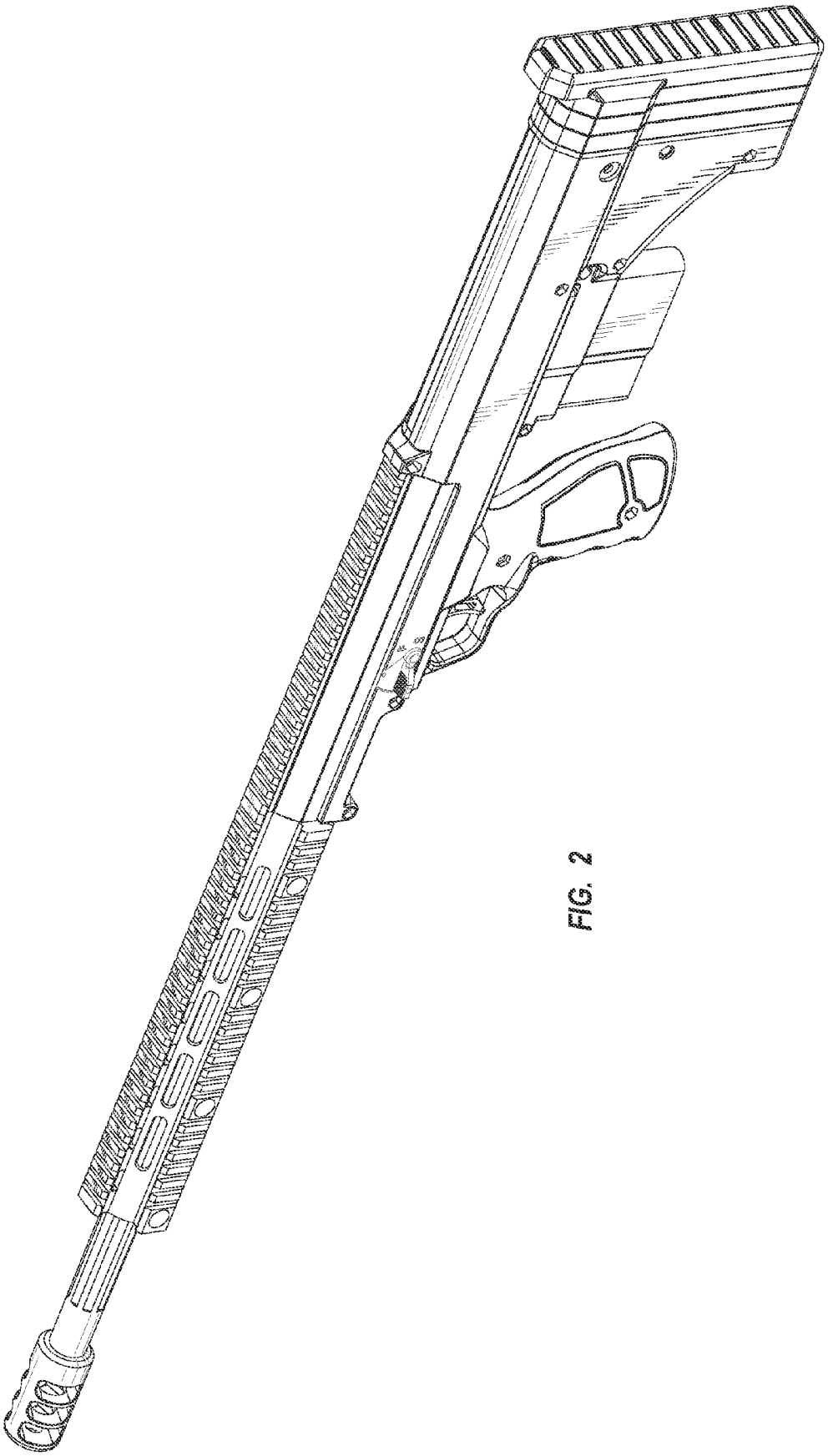

FIG. 2

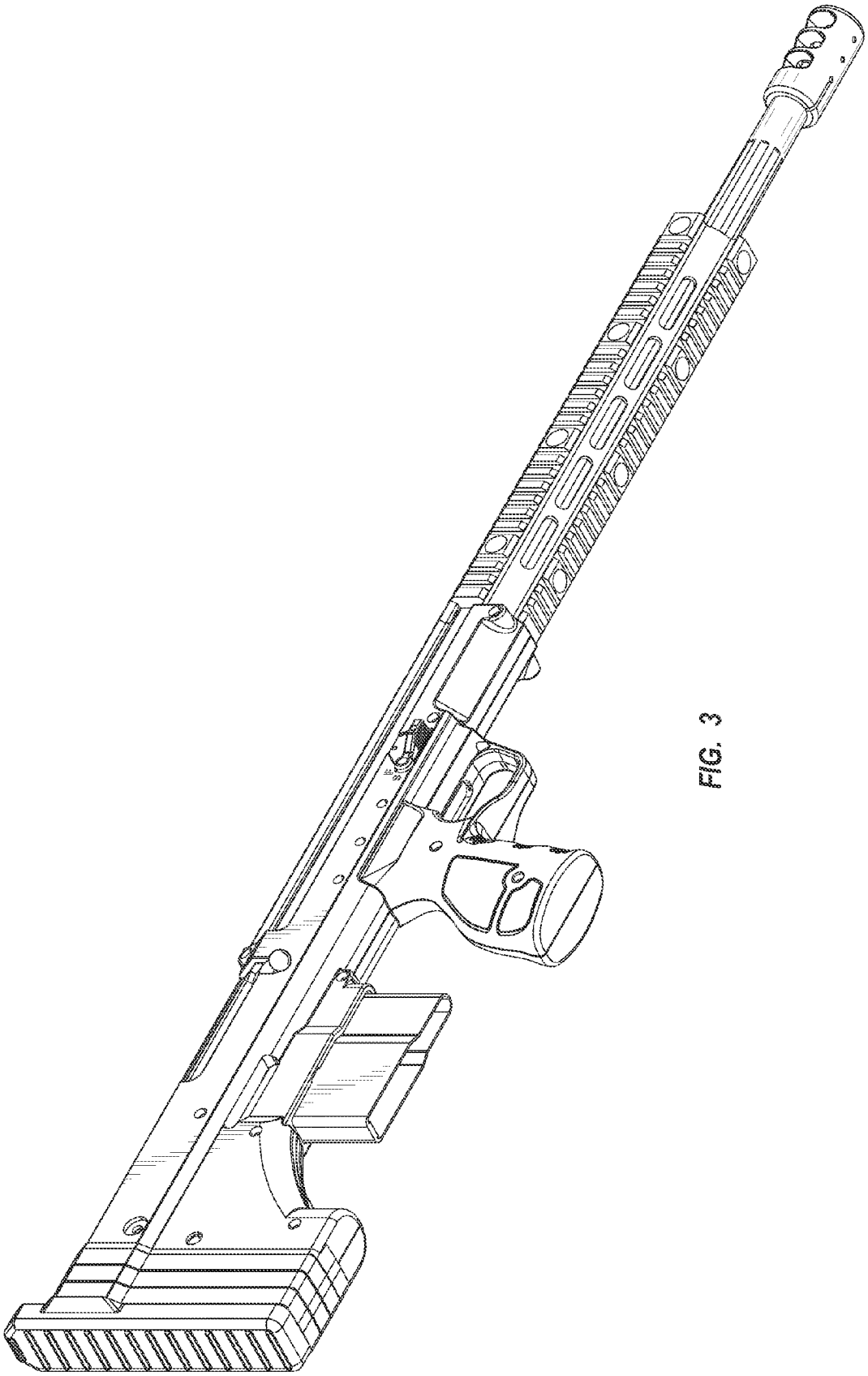

FIG. 3

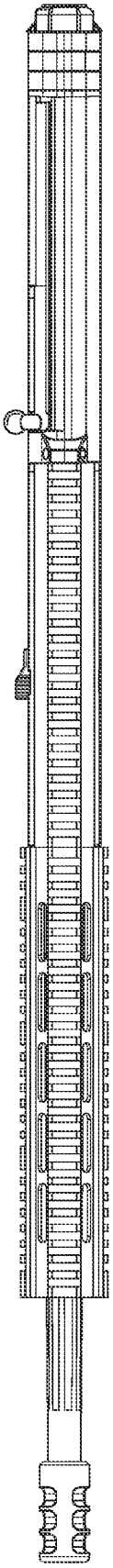

FIG. 6

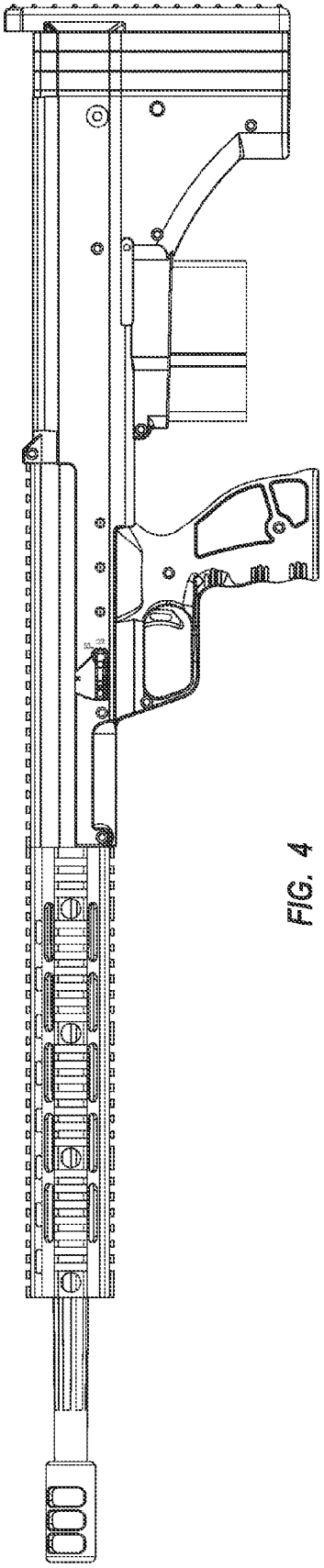

FIG. 4

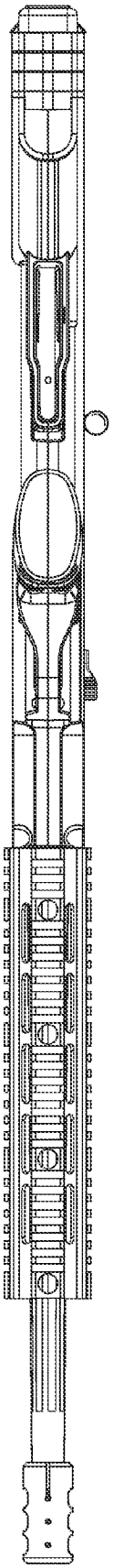

FIG. 7

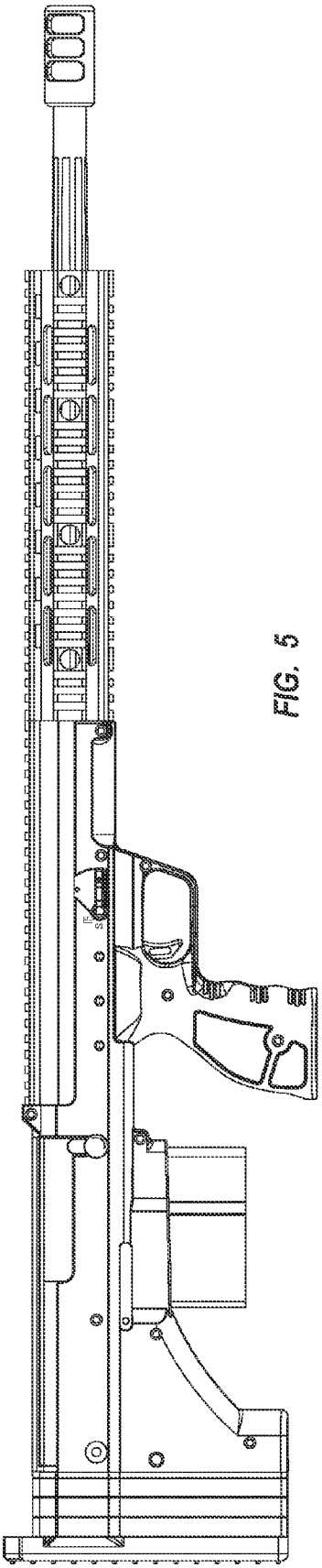

FIG. 5

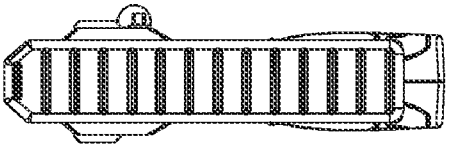

FIG. 9

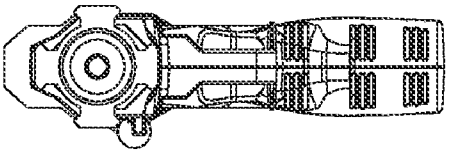

FIG. 8